STREMA®
MASCHINENBAU GMBH

ROTARY-ARM STRETCH WRAPPER

ASS 2000 SERIES

Fully automatic rotor system.

Up to 50 pallets per hour.



STREMA® Fully automatic machines

STREtch MAchines directly from the manufacturer.

www.strema.de

ASS 2000 SERIES

Fully automatic rotary arm stretch wrapper for the lower to medium performance range without compromising on packaging. Up to 50 pallets per hour.

MODULES

BASIC VARIANT

IMAGE ON THE COVER PAGE

50

Basic Modell for pure load securing. Comprehensive basic equipment for all industries.

WITH HOLD-DOWN DEVICE

Electrically powered hold-down device for securing unstable or very light products during the wrapping process.



B-VERSION

Version with hold-down device and integrated film clamping and cutting device – enables wrapping to begin and end at the top of the pallet. This allows for a wide variety of wrap patterns.



UPSTREAM COVER APPLICATOR

For dust and removal protection. Ideal for high-volume production or pallets of varying lengths. Optional handling aid for ergonomic replacement of the cover film without exerting force.



Find the right stretch wrapping solution for your application.
Contact us by email or phone.

info@strema.de

+49 9661 8702 0

Performance level | Number of stretch heads | Weatherproof | Dustproof | Pallets per hour

Directly from the manufacturer
Made In Germany

LAYOUT DRAWING

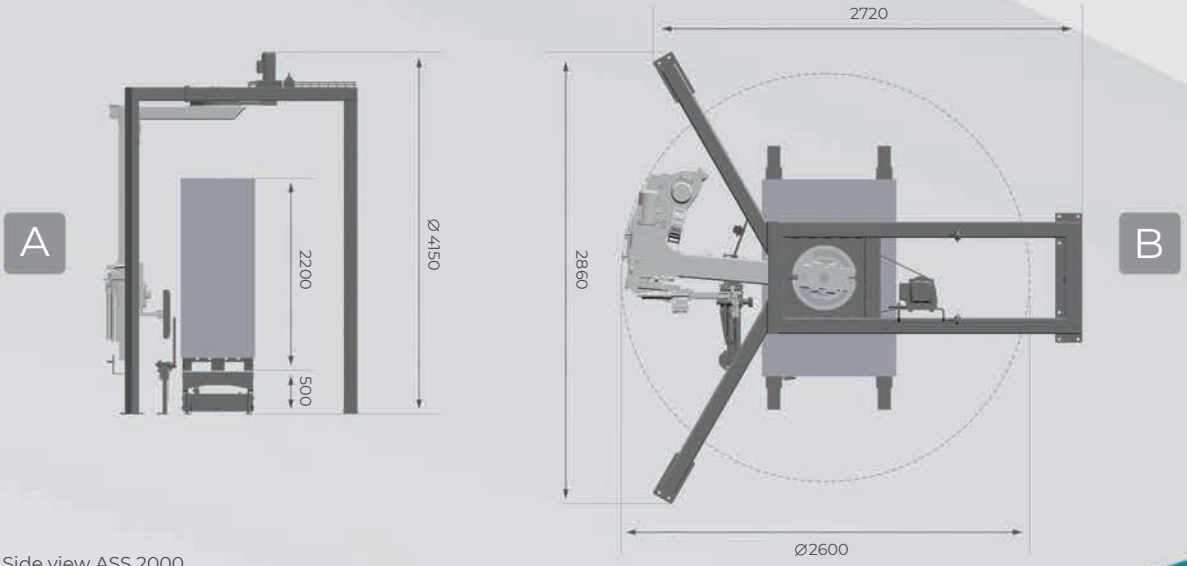

A Side view ASS 2000

B Top view ASS 2000

SERVICE



DIGITAL · ON-SITE

THE CUSTOMER IS OUR FOCUS

As a STREMA® customer, you benefit from our fast and hassle-free service. + All machine parts come directly from the manufacturer + Personal contacts

+49 **9661 8702**-0

STREMA® Maschinenbau GmbH
Kauerhofer Straße 4a-6
92237 Sulzbach-Rosenberg, Germany
info@strema.de

www.strema.de